E Series	Heat resistance	Applicable cylinder	SCA2-L2T(E0) SSD-T1L(ET0) SSD2-T1L(ET0)

CE (Excluding EO)

E0

ET0

Specifications

Descriptions	Reed 2-wire				
	E0			ET0	
Applications	For relay, programmable controller				
Load voltage	12/24 VDC	110 VAC	220 VAC	12/24 VDC	110 VAC
Load current	5 to 50 mA	7 to 20 mA	7 to 10 mA	5 to 50 mA	7 to 20 mA
Internal voltage drop	4 V or less			3.0 V or less	
Leakage current	0 mA				
Indicator lamp	Red LED (Lit when ON)			Yellow LED (Lit when ON)	
Conduit screw	G1/2			-	
Lead wire length	-			1 m (heat-resistant fluorine insulation cabtyre cable 2-conductor 0.5 mm^2)	
Insulation resistance	100 MΩ and over with 500 VDC megger				
Withstand voltage	No failure after 1 minute of 1,500 VAC application.			No failure after 1 minute of 1,000 VAC application.	
Shock resistance	294 m/s^2				
Ambient temperature	-10 (14°F) to +120°C (248°F)			-10 (14°F) to +150°C (302°F)	
Degree of protection	IEC Standards IP67, JIS C0920 (water-tight), oil resistance				
Contact protection circuit *1	None				
Weight	164 g			44 g	

*1: Refer to Intro Page 80 for contact protective measures.

Dimensions

● E Series

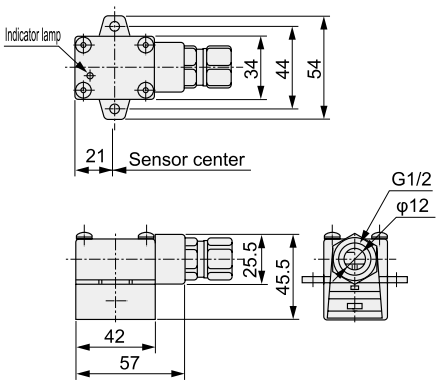

● ET0H Series (axial lead wire)

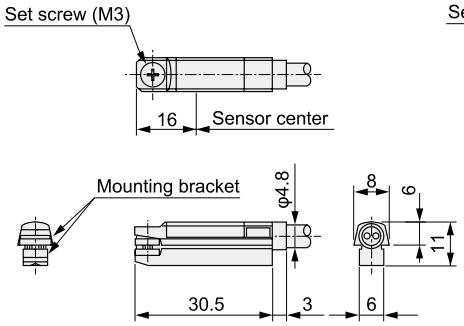

● ET0V Series (radial lead wire)

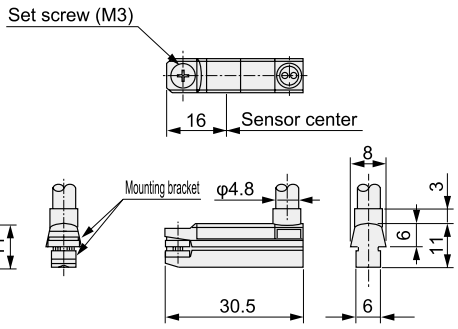

Switch internal circuit diagram

● E0	● ET0H